Hiab XS 099 CLX
Capacity 66,600 ft-lbs

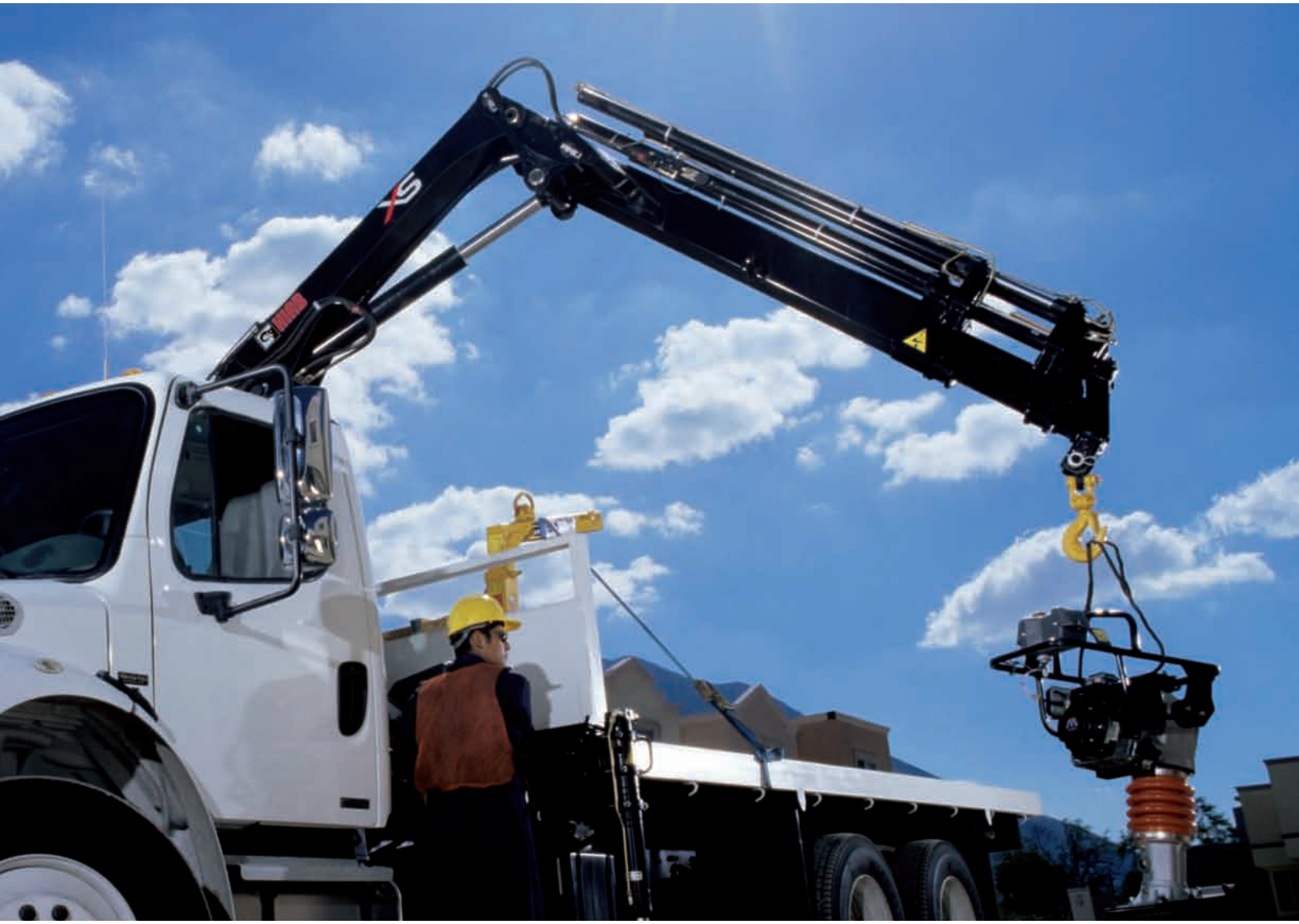

Product brochure

Calgary: 1 (888) 843–6111 • Edmonton: 1 (866) 840–9365 • info@arwtruck.com

Column close to centerline
On Hiab cranes with a rack-and-pinion slewing housing, the center of gravity is as close to the centerline as possible. This means that the same outreach is offered on both sides of the truck.

Load-holding valve
The load-holding valve is a combined hose-failure and load-holding valve, which is mounted on the cylinder.

Oil bath
Keeping the slewing mechanism in an oil bath provides smooth and precise slewing. Reduced wear on the mechanism keeps repair and service costs low and also guarantees longer crane life.

World class productivity

All the benefits you need

Hiab's attention to detail has resulted in the Hiab XS 099 CLX, a crane that not only meets your needs, but exceeds all your expectations in terms of performance, reliability and low cost of ownership.
Easily changeable JIC couplings and large slide pads make sure that the crane is quickly back on the job after service. The Hiab Valve 80 provides smooth and exact control of the crane at all times, making your business even more profitable.

Designed for the tough jobs, every day

Hiab designs cranes for rough and tough operation, and this crane is no exception. The crane is designed to be on the job, day in and day out, where it belongs; however, unscheduled servicing is necessary from time to time. In order to keep servicing time as short as possible, we have equipped the crane with JIC couplings and easily replaceable large slide pads. Before you know it, the crane is back at the jobsite, doing what it does best: creating solutions and versatility for your business.

CLX control system

The CLX control system gives you an excellent and versatile crane, providing all the functionality you need to perform a wide range of general cargo-handling tasks. CLX cranes are controlled manually via side controls. Optional solutions, such as a control platform, are also available. The CLX crane's hydraulic system features load-holding valves with an integrated hose failure function, as well as port relief valves to prevent overloading the crane. The main control valve is the Hiab Valve 80, which enables the crane to perform more than one crane function at a time, smoothly and efficiently.

Calgary: 1 (888) 843–6111 • Edmonton: 1 (866) 840–9365 • info@arwtruck.com

Hexagonal boom profile
The hexagonal profile ensures that the boom is always held in perfect balance, thanks to its shape and large support surface. The profile also minimizes boom deflection, thus reducing maintenance costs and increasing efficiency.

Large slide pads
Large slide pads reduce friction and wear, keeping maintenance costs low. Also the Hiab boom system needs no greasing, and thus it stays cleaner than those of our competitors.

Attachable tools
A wide range of attachable tools are available for your Hiab crane. These enable you to carry out many different tasks.

Side controls
The levers are positioned at the crane base. Cross-controls give the same sequence of levers on both sides. As an option, the levers can be positioned at a control platform.

Valve 80
The Hiab Valve 80 is a top-of-the-line open-center valve, based on a well-proven technique which gives superb reliability. The valve handles large oil flows and provides great precision and ease of operation.

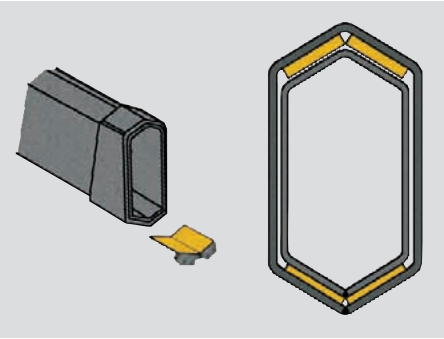

Large slide pads
The hexagonal profile enables the use of larger slide pads. This makes the extensions move more smoothly and reduces mechanical wear on the boom.

ARW TRUCK EQUIPMENT LTD.

Calgary
8019 - 54th Street S.E.
Calgary AB T2C 4R7
1 (888) 843-6111

Edmonton
9410 - 51 Avenue N.W.
Edmonton, AB T6E 5A6
1 (866) 840-9365

info@arwtruck.com www.arwtruck.com