Hiab XS 111
Range 8-11 tm

Basic data

Hiab XS 111 Basic data

Technical data	B-2 Duo	BS-2 HiDuo	B-3 Duo	B-3 HiDuo	E-3 HiDuo	E-5 HiDuo
Max. lifting capacity (kNm)	97	106	93	93	95	89
Outreach - hydraulic extensions (m)	8.0	7.7	10.1	10.1	10.2	14.6
Outreach - manual extensions (m)	12.1	11.8	12.1	12.1	14.3	16.7
Outreach / Lifting capacity, standard (m / kg)	2.8 / 3550	2.3 / 4650	3.1 / 3150	3.1 / 3300	2.4 / 4350	2.6 / 3800
	4.2 / 2360	3.9 / 2780	4.3 / 2200	4.3 / 2440	4.3 / 2440	4.5 / 2180
	5.9 / 1680	5.5 / 1940	5.9 / 1560	5.9 / 1680	6.1 / 1660	6.3 / 1420
	7.7 / 1260	7.4 / 1440	7.8 / 1140	7.8 / 1240	8.1 / 1200	6.3 / 1420
	-	-	9.8 / 900	9.8 / 980	10.2 / 940	10.4 / 720
	-	-	-	-	-	12.5 / 580
	-	-	-	-	-	14.6 / 480
Slewing angle	406°	406°	406°	406°	406°	406°
Height in folded position (mm)	2170	2170	2170	2170	2170	2170
Width in folded position (mm)	2250	2250	2295	2295	2390	2486
Installation space needed (mm)	695	695	785	785	792	808
Weight - "standard" crane without stabilizers (kg)	1200	1180	1300	1300	1620	1770
Weight - stabilizer equipment (kg)	140 - 285	140 - 285	140 - 285	140 - 285	140 - 285	140 - 285

Hiab XS 111 B-3 HiDuo

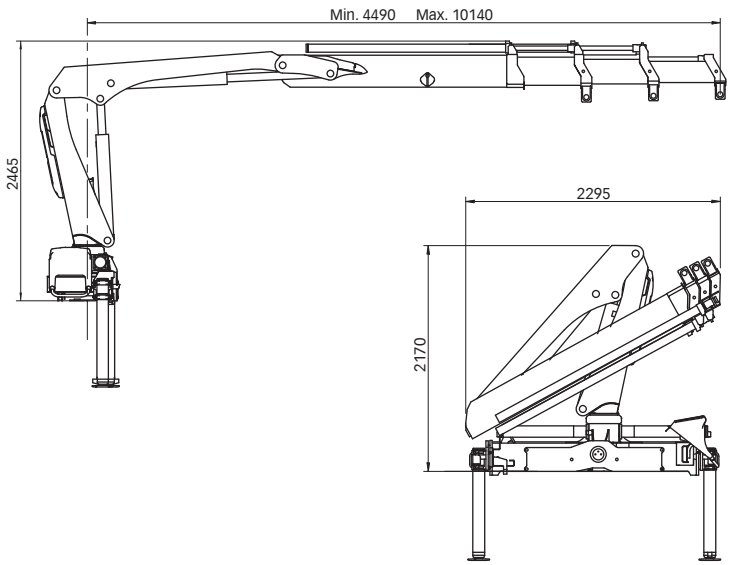

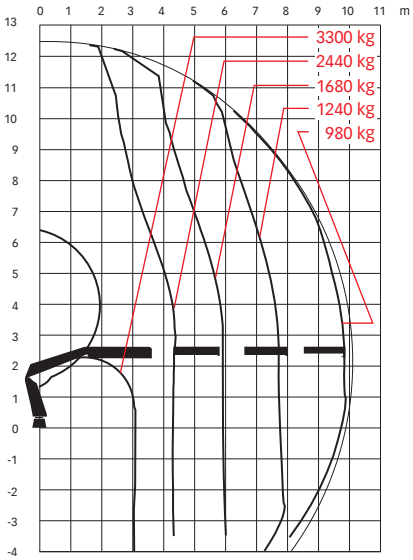

ARW TRUCK EQUIPMENT LTD.

Calgary
8019 - 54th Street S.E.
Calgary AB T2C 4R7
1 (888) 843-6111

Edmonton
9410 - 51 Avenue N.W.
Edmonton, AB T6E 5A6
1 (866) 840-9365

info@arwtruck.com www.arwtruck.com